YOUR SOURCE

for in-stock merchandise

2025 PRODUCT CATALOG

Distributor Resale | Effective August 1, 2025

PRICES SUBJECT TO CHANGE

TABLE OF CONTENTS

TABLE OF CONTENTS

SERRATED-EDGE PAPER
- Shoppers: Kraft + White 3
- Shoppers: Black 4
- Merchandise: Kraft + White 4

BOUTIQUE BAGS
- Tint Totes 5
- Manhattan Totes 6
- Eurototes 7

GARMENT BAGS
- Stock 8
- Custom 9

PLASTIC BAGS
- Luster-Glo 10
- Frosty 11
- T-Shirt 11
- Hi-Density 11

CLOSEOUTS
- Eurototes 12
- Tint Totes 12
- Aubreys 12
- Frosty Shoppers 13
- Frosty Merchandise 13
- Luster-Glo 13
- Hi-Density 13
- Gift Wrap 13

CUSTOM PRINT
- Print Types 14

Artwork
- Requirements 15
- Placement 15
- Guidelines 15
- Compatibility 15

Proofing + Plates
- Proofing Process 16
- Plates + Addt'l Fees 16
- Max Print Areas 16

Print Color Swatches
- Ink Printing 19
- Hot-Stamping: METALLIC Foil 21
- Hot-Stamping: MATTE Foil 22

SERRATED-EDGE

kraft + white paper shopping bags

PRODUCT INFO

PRODUCT HIGHLIGHTS:

Serrated-Edge Top
Kraft: 130 GSM
White: 120 GSM
Handles: Twisted Paper

CUSTOM-PRINTING PRICING PER BAG:

INK-PRINTING:

1 Color | 1 Side . . . .28¢
2nd Side . . . addt'l .38¢

HOT-STAMPING:

1 Color | 1 Side . . . .36¢
2nd Side . . . addt'l .36¢

MINIMUM PER BAG SIZE:

Sizes packed **250/case**: 500 bags - 2 cases
Sizes packed **200/case**: 400 bags - 2 cases
Sizes packed **125/case**: 250 bags - 2 cases

PRINTING INFORMATION:

Print Types . . . . . p. 14
Artwork Info . . . . . .p. 15
Proofing + Plates . . p. 16
Print Areas . . . . .p. 16-18
Ink Swatches. . . p. 19-20
Foil Swatches . . p. 21-22

+ Includes Cardboard Bottom Insert

◊ Hot-Stamping not available on this size

FREE INK-PRINTING PLATE
*See details below

Quick turnaround times

Thicker GSM for greater customer satisfaction

Excellent customer service

FREE
INK-PRINT PLATE
Serrated-Edge Kraft + White Shoppers Only

2 cases = Free Plate for art up to 50 sq in.

4 cases = Free Plate for art up to 70 sq. in.

SERRATED-EDGE PAPER SHOPPERS | PLAIN PRICING				MAX PRINT AREAS	
BAG SIZE	CASE PACK	KRAFT	WHITE	INK-PRINT	HOT-STAMP
5¼ x 3½ x 8	250	$105.00	$115.50	3 x 4½	3 x 4½
5¼ x 3½ x 12½ +	250	$126.00	$142.80	4 x 7	3 x 7
6½ x 3½ x 12½ +	250	$149.10	$155.40	5 x 7	4 x 7
8 x 4¾ x 10¼	250	$113.40	$126.00	6 x 5	5 x 5
10 x 5 x 10	250	$123.90	$136.50	8 x 5	7 x 5
10 x 5 x 13	250	$132.30	$144.90	8 x 7	7 x 7
13 x 5 x 10	250	$138.60	$153.30	9 x 5	8 x 5
13 x 7 x 13	250	$147.00	$176.40	10 x 7	8 x 7
13 x 7 x 17	250	$174.30	$193.20	10 x 9	8 x 8
15 x 10 x 15	200	$153.30	$189.00	12 x 10	N/A
16 x 6 x 12	250	$147.00	$157.50	12 x 6½	8 x 6
16 x 6 x 19	**200**	$147.00	$168.00	12 x 9	8 x 8
18 x 7 x 19	**200**	$168.00	$193.20	14 x 10	8 x 8
24 x 7¼ x 18¾ ◊	**125**	$336.00	$378.00	14 x 10	N/A

SERRATED-EDGE PAPER

black shoppers | kraft + white merchandise

PRODUCT INFO

PRODUCT HIGHLIGHTS:

Serrated-Edge Top

Black Shoppers:

130 GSM
Handles: Twisted Paper

Merchandise:

Kraft: 50 GSM
White: 60 GSM
Handles: None

CUSTOM-PRINTING PRICING PER BAG:

INK-PRINTING:

1 Color | 1 Side . . .28¢

HOT-STAMPING:

1 Color | 1 Side . . . .36¢
2nd Side . . .addt'l .36¢

MINIMUM PER BAG SIZE:

Sizes packed **250/case**:
500 bags - 2 cases

Sizes packed **200/case**:
400 bags - 2 cases

Sizes packed **250+/case**:
500 bags - 1 case

PRINTING INFORMATION:

Print Types . . . . . p. 14
Artwork Info . . . . . .p. 15
Proofing + Plates . . p. 16
Print Areas . . . . .p. 16-18
Ink Swatches. . . p. 19-20
Foil Swatches . . p. 21-22

BLACK SERRATED-EDGE PAPER SHOPPERS | PLAIN PRICING			MAX PRINT AREA
BAG SIZE	CASE PACK	PER CASE - BLACK	HOT-STAMP
5¼ x 3½ x 8	250	$142.80	3 x 4½
8 x 4¾ x 10¼	250	$153.30	5 x 5
10 x 5 x 13	250	$178.50	7 x 7
16 x 6 x 12	250	$214.20	8 x 6
16 x 6 x 19	200	$226.80	8 x 8
INK-PRINTING NOT AVAILABLE ON THIS PRODUCT			

PAPER MERCHANDISE BAGS | PLAIN PRICING				MAX PRINT AREA	
BAG SIZE	CASE PACK	KRAFT	WHITE	INK-PRINT	HOT-STAMP
6 x 9 ^	1000	$84.00	$96.00	N/A	4 x 5
8½ x 11	1000	$102.00	$126.00	6 x 5	6 x 5
12 x 15	1000	$158.00	$200.00	8 x 7	8 x 7
12 x 3 x 18	500	$118.00	$148.00	8 x 7	8 x 7
14 x 3 x 21	500	$198.00	$228.00	9 x 9	8 x 8
16 x 4 x 24	500	$252.00	$308.00	9 x 9	8 x 8
^ INK-PRINTING NOT AVAILABLE ON THIS SIZE | 2ND SIDE INK-PRINTING OR HOT-STAMPING NOT AVAILABLE ON THIS PRODUCT					

INSIDE-OUT TINT TOTES

premium paper shopping bags
non-laminated

PRODUCT INFO

PRODUCT HIGHLIGHTS:

Interior Color Matches Exterior Color

170 GSM

Handles: Twill

Cardboard Bottom Insert

CUSTOM-PRINTING PRICING PER BAG:

INK-PRINTING:

1 Color | 1 Side . . . .28¢

HOT-STAMPING:

1 Color | 1 Side . . . .36¢
2nd Side . . .addt'l .36¢
All sizes except 16x6x18

***16x6x18:**

1 Color | 1 Side. . . .46¢
2nd Side . .addt'l .46¢

MINIMUM PER BAG SIZE:

500 bags - 5 cases

NEW LOWER MINIMUM!

***16x6x18:**

300 bags - 3 cases

PRINTING INFORMATION:

Print Types . . . . . p. 14
Artwork Info . . . . . .p. 15
Proofing + Plates . . p. 16
Print Areas . . . . .p. 16-18
Ink Swatches. . . p. 19-20
Foil Swatches . . p. 21-22

ONE-SIDE INK-PRINTING NOW AVAILABLE!

TINT TOTES | PLAIN PRICING				MAX PRINT AREA	
BAG SIZE	CASE PACK	1-4 CASES	5+ CASES	INK-PRINT	HOT-STAMP
5½ x 3½ x 6 ^	100	$132.00	$121.00	N/A	3 x 3
6¼ x 3½ x 8½	100	$147.40	$136.40	4 x 5	4 x 5
8 x 4 x 10	100	$156.20	$145.20	6 x 5	5 x 5
10 x 5 x 13	100	$178.20	$167.60	8 x 7	7 x 7
13 x 5 x 10	100	$180.04	$171.60	9 x 5	8 x 5
16 x 6 x 12	100	$224.40	$213.40	12 x 6½	8 x 6
16 x 6 x 18 *	100	$268.40	$257.40	12 x 9	8 x 8

^ INK-PRINTING NOT AVAILABLE ON THIS SIZE | * SEPARATE HOT-STAMP PRICING + MINIMUM QTY.
2ND SIDE INK-PRINTING NOT AVAILABLE ON THIS PRODUCT

COLORS AVAILABLE

Black

Celery

Robin's Egg Blue

Rose

Sand

Slate Gray

Willow

MANHATTAN TOTES

luxe premium paper shopping bags
non-laminated

PRODUCT INFO

PRODUCT HIGHLIGHTS:

Luxe Weight Paper
Kraft: 200 GSM
White: 180 GSM
Handles: Twill
Cardboard bottom insert

CUSTOM-PRINTING PRICING PER BAG:

INK-PRINTING:

1 Color | 1 Side . . . .28¢

HOT-STAMPING:

1 Color | 1 Side . . . .36¢
2nd Side . . .addt'l .36¢
All sizes except 20x7x16

***20x7x16:**

1 Color | 1 Side. . . .46¢
2nd Side . .addt'l .46¢

MINIMUM PER BAG SIZE:

500 bags - 5 cases

NEW LOWER MINIMUM!
***20x7x16:**

300 bags - 6 cases

PRINTING INFORMATION:

Print Types . . . . . p. 14
Artwork Info . . . . . .p. 15
Proofing + Plates . . p. 16
Print Areas . . . . .p. 16-18
Ink Swatches. . . p. 19-20
Foil Swatches . . p. 21-22

LOOKS GREAT CUSTOM PRINTED!

Ideal for:
Wine Bottles,
Beauty Products,
Olive Oil Bottles + More!

5½ x 3½ x 12½ - Single Bottle
6½ x 3½ x 12½ - Two Bottle

ONE-SIDE INK-PRINTING NOW AVAILABLE!

MANHATTAN TOTES | PLAIN PRICING				MAX PRINT AREA	
BAG SIZE	CASE PACK	1-4 CASES	5 + CASES	INK-PRINT	HOT-STAMP
6¼ x 3½ x 6½ ^	100	$144.10	$133.10	N/A	4 x 3
5½ x 3½ x 12½	100	$165.00	$158.40	4 x 7	3 x 7
6½ x 3½ x 12½	100	$178.20	$167.20	5 x 7	4 x 7
8 x 4 x 10	100	$168.20	$157.20	6 x 5	5 x 5
13 x 5 x 10	100	$213.80	$202.80	9 x 5	8 x 5
16 x 6 x 12	100	$277.90	$266.90	12 x 6½	8 x 6
20 x 7 x 16 *	50	$217.80	$208.00	14 x 10	8 x 7
21 x 13½ x 15 Δ	50	$327.80	$318.00	N/A	N/A

^ INK-PRINTING NOT AVAILABLE ON THIS SIZE | * SEPARATE HOT-STAMP PRICING + MINIMUM QTY.
Δ PLAIN ONLY | 2ND SIDE INK-PRINTING NOT AVAILABLE ON THIS PRODUCT

MANHATTAN TOTES | COLOR / SIZE AVAILABILITY

BAG SIZE	KRAFT / BLACK	KRAFT / KRAFT	KRAFT / WHITE	WHITE / BLACK	WHITE / WHITE
6¼ x 3½ x 6½	✓	✓	✓	✓	✓
5½ x 3½ x 12½	✓	N/A	N/A	✓	N/A
6½ x 3½ x 12½	✓	N/A	N/A	✓	N/A
8 x 4 x 10	✓	✓	✓	✓	✓
13 x 5 x 10	✓	✓	✓	✓	✓
16 x 6 x 12	✓	✓	✓	✓	✓
20 x 7 x 16	✓	✓	✓	✓	✓
21 x 13½ x 15	✓	N/A	N/A	✓	N/A

EUROTOTES

luxe paper shopping bags
laminated

PRODUCT INFO

PRODUCT HIGHLIGHTS:

Laminated | 180 GSM
Cardboard bottom insert

CUSTOM-PRINTING PRICING PER BAG:

HOT-STAMPING

1 Color | 1 Side . . . .36¢
2nd Side . . .addt'l .36¢
All sizes except 16x6x18 + 20x7x16

***16x6x18 + 20x7x16:**

1 Color | 1 Side. . . .46¢
2nd Side . .addt'l .46¢

MINIMUM PER BAG SIZE:

500 bags - 5 cases

NEW LOWER MINIMUM!
***16x6x18 + 20x7x16:**

300 bags

PRINTING INFORMATION:

Print Types . . . . . p. 14
Artwork Info . . . . . .p. 15
Proofing + Plates . . p. 16
Print Areas . . . . .p. 16-18
Ink Swatches. . . p. 19-20
Foil Swatches . . p. 21-22

HANDLES: White & Black have Twill handles. All other colors have Rope and will transition to Twill.

EUROTOTES | PLAIN PRICING				MAX PRINT AREA
BAG SIZE	CASE PACK	1-4 CASES	5+ CASES	HOT-STAMP
5½ x 3½ x 6	100	$136.40	$127.60	3 x 3
6¼ x 3½ x 8½	100	$151.80	$140.80	4 x 5
8 x 4 x 10	100	$154.00	$143.00	5 x 5
9 x 3¼ x 7	100	$154.00	$143.00	5 x 3
13 x 5 x 10	100	$204.60	$193.60	7 x 5
16 x 6 x 12	100	$246.40	$235.40	8 x 6
16 x 6 x 18 *	100	$363.00	$352.00	8 x 8
20 x 7 x 16 *	50	$198.00	$187.00	8 x 7
24 x 9 x 15 ◊+	50	$275.00	$264.00	N/A

INK-PRINTING NOT AVAILABLE ON THIS PRODUCT | * SEPARATE HOT-STAMP PRICING + MINIMUM QTY.
◊ HOT-STAMPING NOT AVAILABLE ON THIS SIZE | + WHITE MATTE ONLY

EUROTOTES | COLOR/SIZE AVAILABILITY

	GLOSS		MATTE							
	WHITE	BLACK	WHITE	BLACK	CREME	FUCHS.	HUNTER	NAVY	GOLD	SILVER
5½ x 3½ x 6	✓	✓	✓	✓	N/A	N/A	✓	✓	✓	✓
6¼ x 3½ x 8½	✓	✓	✓	✓	*See Closeouts - page 12*					
8 x 4 x 10	✓	✓	✓	✓	✓	✓	✓	✓	✓	✓
9 x 3¼ x 7	✓	✓	✓	✓	*See Closeouts - page 12*					
13 x 5 x 10	✓	✓	✓	✓	✓	✓	N/A	✓	N/A	N/A
16 x 6 x 12	✓	✓	✓	✓	✓	✓	✓	✓	✓	✓
16 x 6 x 18	✓	N/A	✓	N/A	N/A	N/A	N/A	N/A	N/A	N/A
20 x 7 x 16	✓	N/A	✓	✓	✓	✓	N/A	✓	N/A	N/A

STOCK GARMENT BAGS

perforated-on-rolls

PRODUCT INFO

PRODUCT HIGHLIGHTS:

Perforated on a Roll

Smooth Film

SHIPPING WEIGHT:

Clear: 21 lbs
Color: 26 lbs

SPECIAL ORDER COLORS:

4-5 week lead time

8 roll minimum per bag length

Use 6+ Rolls pricing

COLORS AVAILABLE:

Chocolate, Purple, Red, Sky Blue, Teal & Yellow

GARMENT BAGS | PLAIN PRICING			
QUANTITY	BAG SIZE	COLORS	CLEAR
1 Roll	All Lengths	$196.90	$167.50
2-5 Rolls	All Lengths	$191.70	$160.70
6+ Rolls	All Lengths	$181.00	$148.10
SIZES AND COLORS MAY BE COMBINED FOR QUANTITY PRICING			

COLOR ROLLS ARE 21" WIDE WITH A 3" GUSSET

CLEAR ROLLS ARE 21" WIDE WITH A 4" GUSSET

GARMENT BAGS | COLOR/SIZE AVAILABILITY					
COLOR		38"	40"	54"	72"
Black		✓	N/A	✓	✓
Cerise		N/A	N/A	✓	✓
Creme		✓	N/A	✓	N/A
Gray		N/A	✓	✓	N/A
Light Pink		N/A	N/A	✓	✓
Mauve		N/A	N/A	✓	✓
Navy		N/A	✓	N/A	N/A
Turquoise		N/A	N/A	✓	✓
White		✓	N/A	✓	✓
Clear Light - .00065		✓	N/A	✓	N/A
Clear Heavy - .001		✓	N/A	✓	✓
		38"	40"	54"	72"
Bags/Roll: Colors @ .001		444	422	312	234
Bags/Roll: Clear Light @ .0065		510	N/A	359	N/A
Bags/Roll: Clear Heavy @ .001		331	N/A	233	175

CUSTOM GARMENT BAGS

Ink-Printed | perforated-on-rolls

FILM COLORS	
BLACK	
CERISE	
CHOCOLATE	
CITRUS	
CREME	
GRAY	
HUNTER GREEN	
LIGHT PINK	
MAUVE	
NAVY	
PURPLE	
RED	
SKY BLUE	
TEAL	
TURQUOISE	
WHITE	
YELLOW	

DETAILS

PLATES:

At cost | $150+
(Based on art size)

LOGO/ART PLACEMENT:

An 18" Random Repeat is standard on printed garment bags. Each print will begin 18" from the top of the previous print and repeat down the film roll. Print may fall across bag perforation.

PRICING IS PER 1000 BAGS

BAG SIZE	COLOR /SIDES	1M		2M		3M		5M	
		WHITE	COLORS	WHITE	COLORS	WHITE	COLORS	WHITE	COLORS
21 x 3 x 36	1C 1S	$812.10	$870.60	$573.80	$632.50	$494.70	$552.80	$406.20	$422.60
468 / roll	1C 2S	$1304.60	$1363.10	$829.60	$648.00	$729.50	$762.60	$509.30	$567.40
21 x 3 x 38	1C 1S	$827.90	$886.00	$590.70	$648.00	$510.00	$568.60	$422.30	$480.60
444 / roll	1C 2S	$1321.00	$1373.90	$844.70	$905.70	$720.80	$745.80	$525.20	$583.30
21 x 3 x 40	1C 1S	$843.40	$901.34	$605.20	$663.20	$525.40	$583.30	$437.70	$496.10
422 / roll	1C 2S	$1337.40	$1395.80	$861.80	$923.00	$703.90	$762.30	$544.40	$599.80
21 x 3 x 48	1C 1S	$904.10	$916.30	$665.60	$724.40	$586.20	$618.40	$498.60	$556.90
351 / roll	1C 2S	$1400.30	$1450.60	$843.20	$883.10	$698.70	$751.90	$550.90	$604.20
21 x 3 x 54	1C 1S	$959.90	$1018.20	$736.90	$795.50	$657.20	$715.30	$544.30	$602.50
312 / roll	1C 2S	$1476.00	$1548.50	$1001.30	$1059.80	$901.00	$922.00	$673.60	$732.10
21 x 3 x 60	1C 1S	$1029.10	$1087.20	$791.70	$849.30	$712.30	$770.90	$611.20	$673.10
281 / roll	1C 2S	$1534.50	$1600.50	$1067.50	$1118.40	$901.40	$960.80	$729.00	$787.30
21 x 3 x 72	1C 1S	$1162.20	$1220.40	$924.00	$982.20	$845.60	$903.60	$7582.30	$810.70
234 / roll	1C 2S	$1680.40	$1739.10	$1205.50	$1263.50	$1046.80	$1105.30	$866.5	$976.00

STANDARD INK COLORS | CUSTOM INK MATCH: $100

Black		Copper PMS 876		Gold PMS 871		Orange PMS 021		Pantone Blue		Pantone Green		Pantone Purple		Pantone Yellow	
Process Magenta		Red PMS 185		Reflex Blue		Rhod. Red		Rubine Red		Silver PMS 877		Warm Red		White	

PLASTIC BAGS

luster-glo

PRODUCT INFO

PRODUCT HIGHLIGHTS:

Lo-Density | High Gloss
Die-Cut Handles
Smooth Film

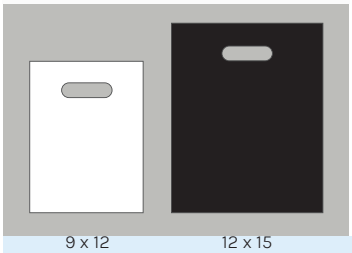

9 x 12 12 x 15

LUSTER-GLO PLASTIC BAGS | PLAIN PRICING					
BAG SIZE	GAUGE	CASE PACK	1-4 CASES	5-9 CASES	10+ CASES
9 x 12	1.25	1000	$93.70	$80.70	$78.20
12 x 15	1.25	1000	$142.40	$126.00	$122.10
15 x 18 + 4	1.25	500	$120.00	$104.30	$103.40
18 x 18 + 4	1.25	500	$139.30	$132.00	$126.00
20 x 20 + 5	1.5	500	$167.80	$148.40	$143.60
24 x 24 + 5	1.5	500	$241.60	$232.30	$223.90
36 x 24 + 5	1.75	250	$280.00	$264.20	$260.60
INK-PRINTING OR HOT-STAMPING ARE NOT AVAILABLE ON THIS PRODUCT					

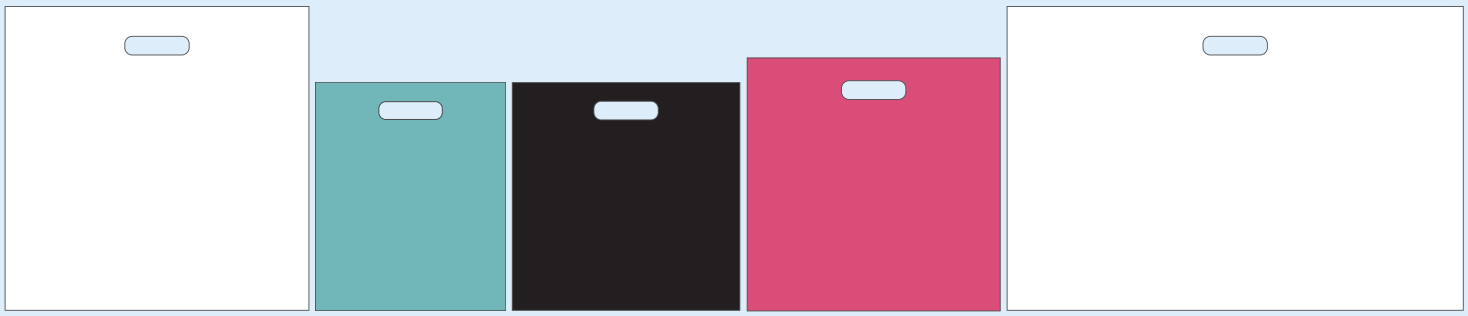

24 x 24 + 5 15 x 18 + 4 18 x 18 + 4 20 x 20 + 5 36 x 24 + 5

LUSTER-GLO | COLOR / SIZE AVAILABILITY											
	WHITE	BLACK	CITRUS	DUSTY ROSE	HUNTER GREEN	IVORY	MAG-ENTA	NAVY	PURPLE	RED	TURQ-UOISE
15 x 18 + 4	✓	✓	✓	✓	✓	✓	✓	✓	✓	✓	✓
20 x 20 + 5	✓	✓	✓	✓	✓	✓	✓	✓	✓	✓	✓
9 x 12	✓	✓									
12 x 15	✓	✓									
18 x 18 + 4	✓	✓									
24 x 24 + 5	✓										
36 x 24 + 5	✓										

PLASTIC BAGS

frosty | t-shirt | hi-density

PRODUCT INFO

PRODUCT HIGHLIGHTS:

COLORS AVAILABLE:

Clear + Ebony

MERCHANDISE BAGS:

Flat Bag
Handles: Die-Cut

SHOPPER BAGS:

Cardboard Bottom Insert
Handles: Soft-Loop

FROSTY MERCHANDISE BAGS			CLEAR	EBONY
BAG SIZE	GAUGE	CASE PACK	PER CASE	PER CASE
9 x 12	2.75	500	$100.00	$120.00
12 x 15	2.75	500	$138.00	$170.00
16 x 19	2.75	250	$120.00	$160.00
INK-PRINTING OR HOT-STAMPING ARE NOT AVAILABLE ON THIS PRODUCT				

NEW LOWER PRICES!

FROSTY SHOPPERS | PLAIN PRICING			CLEAR	EBONY
BAG SIZE	GAUGE	CASE PACK	PER CASE	PER CASE
8 x 5 x 10 x 5	3 mil	250	$110.00	$140.00
10 x 5 x 13 x 5	3 mil	250	$132.00	N/A
13 x 7 x 17 x 7	3 mil	250	$164.00	N/A
16 x 6 x 12 x 6	3 mil	250	$180.00	$224.00
16 x 6 x 18 x 6	3 mil	250	$208.00	$250.00
18 x 10 x 22 x 10	4 mil	100	$250.00	N/A
INK-PRINTING OR HOT-STAMPING ARE NOT AVAILABLE ON THIS PRODUCT				

T-SHIRT + HI-DENSITY

PRODUCT HIGHLIGHTS:

Lightweight Plastic Bags

NEW T-SHIRT BAG SIZES AVAILABLE!

T-SHIRT STYLE | PLAIN WHITE ONLY			
BAG SIZE	GAUGE	CASE PACK	PER CASE
12 x 7 x 23	.0006	1000	$110.00
14 x 8 x 25	.0008	1000	$120.00
18 x 8 x 30	.0009	500	$106.00
24 x 15 x 36	.001	250	$116.00
INK-PRINTING OR HOT-STAMPING ARE NOT AVAILABLE ON THIS PRODUCT			

HI-DENSITY PLASTIC BAGS | WHITE			
BAG SIZE	GAUGE	CASE PACK	PER CASE
24 x 6 x 36	0.00085	300	$116.00
INK-PRINTING OR HOT-STAMPING ARE NOT AVAILABLE ON THIS PRODUCT			

CLOSE-OUTS

Available while supplies last

EUROTOTES | CLOSEOUT PRICING | COLOR/SIZE AVAILABILITY

ALL BAGS HAVE ROPE HANDLES

DISCONTINUED SIZES IN CURRENT + DISCONTINUED COLORS

BAG SIZE	CASE PACK	PER CASE	BURGUNDY		RED		ROYAL		HUNTER		NAVY		COPPER		GOLD		SILVER	
			GLOSS	MATTE	GLOSS	MATTE	GLOSS	MATTE	GLOSS	MATTE	GLOSS	MATTE	GLOSS	MATTE	GLOSS	MATTE	GLOSS	MATTE
6¼ x 3½ x 8½	100	$67.20	N/A	✓	N/A	✓	N/A	✓	N/A	✓	N/A	✓	N/A	N/A	N/A	N/A	N/A	✓
9 x 3¼ x 7	100	$104.00	N/A	N/A	N/A	N/A	✓	✓	✓	N/A	✓	✓	N/A	N/A	N/A	✓	N/A	✓

BAG SIZE	CASE PACK	PER CASE	BURGUNDY		RED		ROYAL	
			GLOSS	MATTE	GLOSS	MATTE	GLOSS	MATTE
5½ x 3½ x 6	100	$94.00	N/A	N/A	✓	✓	N/A	✓
8 x 4 x 10	100	$104.00	N/A	N/A	N/A	N/A	N/A	✓
16 x 6 x 12	100	$172.00	N/A	✓	N/A	✓	N/A	✓

DISCONTINUED COLORS:

BURGUNDY
RED
ROYAL

TINT TOTES | CLOSEOUT PRICING | DISCONTINUED COLORS

ALL BAGS HAVE ROPE HANDLES

			AQUA	CERISE	CHOCOLATE	EGGPLANT	GRAPE	IVORY	PERIWINKLE	RED
5½ x 3½ x 6	100	$106.00	✓	✓	N/A	✓	✓	✓	✓	✓
6¼ x 3½ x 8½	100	$120.00	✓	✓	✓	N/A	N/A	N/A	✓	✓
8 x 4 x 10	100	$126.00	✓	✓	N/A	N/A	✓	✓	N/A	N/A
10 x 5 x 13	100	$144.00	✓	✓	✓	N/A	✓	✓	N/A	N/A
13 x 5 x 10	100	$148.00	✓	✓	✓	N/A	✓	✓	N/A	N/A
16 x 6 x 12	100	$182.00	✓	N/A	✓	✓	✓	✓	N/A	N/A
16 x 6 x 18	100	$220.00	✓	✓	✓	TN/A	✓	✓	N/A	N/A

AUBREY TOTES | CLOSEOUT PRICING | DISCONTINUED BAG COLLECTION

ALL BAGS HAVE ROPE HANDLES

BAG SIZE	CASE PACK	KRAFT	WHITE	METALLIC	KRAFT	WHITE	COPPER	GOLD	SILVER
5½ x 3½ x 6	100	$106.50	$119.60	$134.20	N/A	✓	✓	N/A	✓
8 x 4 x 10	100	$125.24	$148.10	$171.50	N/A	N/A	N/A	✓	✓
10 x 5 x 13	100	$173.40	$196.40	$212.80	N/A	✓	✓	✓	✓
13 x 5 x 10	100	$183.00	$206.40	N/A	✓	✓	N/A	N/A	N/A
16 x 6 x 12	100	$220.40	$237.80	$247.00	N/A	N/A	N/A	✓	✓
20 x 7 x 16	50	$140.60	$150.60	$170.00	N/A	✓	✓	N/A	✓

CLOSE-OUTS

Available while supplies last

FROSTY MERCHANDISE BAGS | CLOSEOUT PRICING | COLOR/SIZE AVAILABILITY

BAG SIZE	GAUGE	CASE PACK	PER CASE	AQUA	CERISE	CHOCOLATE	GRAPE	IVORY	LIME	ROSE
9 x 12	3 mil	500	$92.50	✓	✓	✓	N/A	✓	N/A	✓
12 x 15	3 mil	500	$121.00	N/A	✓	✓	✓	✓	✓	✓
16 x 19	3 mil	250	$112.00	N/A	N/A	N/A	✓	N/A	N/A	✓

FROSTY SHOPPER BAGS | CLOSEOUT PRICING | COLOR/SIZE AVAILABILITY

BAG SIZE	GAUGE	CASE PACK	PER CASE	CERISE	CHOCOLATE	IVORY	KRAFT (4.0 MIL)	LIME	MET. BLUE	ROSE	SKY BLUE
5 x 3 x 6	3 mil	500	$60.00	✓	N/A	N/A	✓	N/A	N/A	N/A	N/A
8 x 5 x 10	3 mil	500	$116.50	N/A	✓	N/A	N/A	✓	N/A	N/A	N/A
16 x 6 x 12	3 mil	500	$175.00	N/A	✓	✓	N/A	N/A	✓	✓	✓
16 x 6 x 18	3 mil	250	$194.50	✓	✓	✓	N/A	N/A	N/A	✓	N/A

LUSTER-GLO BAGS | CLOSEOUT PRICING | COLOR/SIZE AVAILABILITY

BAG SIZE	GAUGE	CASE PACK	PER CASE	DISCONTINUED COLOR	DISCONTINUED SIZES IN CURRENT COLORS		
				BURGUNDY	DUSTY ROSE	HUNTER GREEN	TEAL
15 x 18 + 4	1.25	1000	$80.00	✓	N/A	N/A	N/A
18 x 18 + 4	1.25	500	$94.00	N/A	✓	✓	✓
20 x 20 + 5	1.5	500	$126.00	✓	N/A	N/A	N/A

HI-DENSITY BAGS | CLOSEOUT PRICING | COLOR/SIZE AVAILABILITY

BAG SIZE	COLOR	GAUGE	CASE PACK	PER CASE	COLORS AVAILABLE*
7 x 36	White	.001	500	$50.00	Dark Blue Dusty Rose Hunter Green Teal
8½ x 11	Colors*	.001	1000	$20.00	

GIFT WRAP | CLOSEOUT PRICING | $2 PER ROLL | 24" X 100' CUTTER BOX

	Fleur de Lis #2340		Bluebird of Happiness #4806		Pastel Wreath #4853		Patriotic Bears #4381

CUSTOM PRINTING

print types: ink-print + hot-stamp

INK-PRINT + HOT-STAMP

Hot-Stamping and Ink-Printing are two distinct methods used for adding designs or text to bags. Each print-type is available for select bag styles and sizes as noted throughout the catalog.

These compatibility parameters are proven to ensure the cleanest and best printed product for your custom-printed packaging needs.

DIFFERENCES BETWEEN INK-PRINT + HOT-STAMP | WHEN TO USE EACH		
	INK-PRINTING	**HOT-STAMPING**
PROCESS	Directly applies ink to the bag through flexography printing by depositing a layer of ink which is absorbed into the substrate of the product's surface.	Uses heat and pressure to transfer a Foil onto the bag's surface. A metal die is heated and pressed on to the Foil and bag material.
FOIL VS INK	**INK**: Better suited for intricate designs and white or light colored bags.	**FOIL**: Used for a metallic or shiny finish and full art color opacity on Kraft or color bags.
FINISH	Results in a matte finish. The appearance can vary based on the shade of the product being printed.	Produces a glossy, reflective finish, giving bags a luxurious feel. Foil is available in metallic, satin, or matte finishes.
DESIGN COMPLEXITY	Can handle complex designs with thin lines and fine details more effectively than Hot-Stamping.	Best suited for simple designs or artwork. Intricate designs may fill-in, become illegible, or fail to print.
LEAD TIMES	Shorter lead time due to quick set-up time and high-volume printing process.	Longer lead-time due to set-up time and individual bag printing process.
PRINTABLE BAG TYPES	Serrated-Edge Shoppers • Serrated-Edge Merchandise Manhattan Totes • Tint Totes	Serrated-Edge Shoppers • Serrated-Edge Merchandise Manhattan Totes • Tint Totes • Eurototes

INK-PRINTED KRAFT BAG WITH WHITE INK

Kraft and color bags absorb white or light ink colors which can change the look of the finished product.

It may appear vintage or distressed, which works great for many types of product / stores.

HOT-STAMPED KRAFT BAG WITH WHITE FOIL

Hot-stamped Foil will not absorb into the bag, thus creating a clean and opaque printed finish.

White or light color Foils have a more pronounced print on kraft and color bags.

CUSTOM PRINTING

artwork requirements + guidelines

ARTWORK REQUIREMENTS

All artwork files must be submitted to orders@tandjadventures.com with the **PO#, Customer/Ship-to name,** and **ARTWORK** in the subject line.

Artwork is subject to acceptance by the Art Department based on quality, printability, product type, material color, print color, print method, and production capabilities.

Artwork files must be submitted digitally via email as Adobe Illustrator files (.AI file type—vector format) with a confirming PDF file. After an individual review, the Art Department may accept other file formats.

All fonts must be converted to outlines and any graphic source files must be submitted along with the artwork file and PDF.

Our Art Department will not alter or change the submitted artwork. It is the customer's responsibility to promptly provide a revised artwork file and approved proof (if applicable). A revised proof will be sent for approval before production begins.

PLACEMENT

Our team aims to horizontally and vertically center the printed artwork on the bag. However, due to various bag elements (handle type, handle location, crease/fold location, gusset folds, fold-over tops, and bag sizes), the artwork placement may need to be slightly shifted for a clean and visually balanced printed product. We reserve the right to make these decisions during production without contacting the customer for approval.

Specific bag styles and sizes cannot have the print area perfectly centered vertically. There is limited vertical print space area on certain bags. Artwork height must be reduced or the print area will be positioned closer to the bottom of the bag. See below:

SHORT PRINT AREA = NEED FOR SHORTER PRINT SIZE

Taller logo on bag with a short print area. Logo cannot be centered vertically, must be placed toward bottom of bag.

Shorter logo on bag with a short print area. Logo can be centered vertically. Applies to 5x3x8, 5x3x12, 6x3x12, 6x3x8, 9x3x7, 13x5x10, + 16x6x12 bags

ARTWORK GUIDELINES

Large coverage areas and reverse-out designs are not recommended, especially for Hot-Stamping.

All fonts should be a minimum size of 9pt to ensure clear printing. However, depending on the font characteristics, some fonts may need to be larger to prevent the areas between letters or inside letters from filling-in, becoming illegible, or failing to print.

Detailed art elements, thin lines, and small white spaces may need to be thickened or adjusted to ensure they do not fill-in or fail to print. White space may be required between art elements for better readability.

Registration, Copyright, or Trademark symbols may need to be increased in size to ensure printing and legibility. If the artwork contains one of these marks outside of the principal elements, the customer must inform the Art Department whether the artwork should be centered including or excluding the symbol.

TOLERANCES

Registration: 1/8"
Side-to-Side Alignment: 1/8"

SCREENS

Artwork with screens cannot be Ink-printed or Hot-Stamped

STANDARDS

Positive Line ≥ 2pt
Negative Line ≥ 3pt
Positive Type ≥ 9pt
Thin Positive Type ≥ 11pt
Negative Type ≥ 11pt bold
Thin Neg. Type ≥ 13pt bold

COMPATIBILITY:

PRINT TYPE + PRINT COLOR + MATERIAL

Ink colors may appear different on the finished product based on the bag material, bag color, ink color, and the ink's water-soluble nature. The ink color swatches shown are based on printing a white bag in ideal conditions.

Light ink colors, light-colored Foils, white ink, and Ink colors similar to the product color may appear dull and not be visible or legible on kraft or colored bags.

All Ink and Foil swatches in this catalog are a CMYK representation of Pantone or Foil colors.

To see the most accurate color:

Ink-Printing:

Reference a Pantone Color Bridge Uncoated Guide

Hot-Stamping / Foil:

Reference the Swatch Sheet provided in the Print Kit.

CUSTOM PRINTING

proofing process | plates | max print areas

PROOFING PROCESS

Our Art Department will review all submitted artwork and approved proofs for usability. If an approved proof is not provided, our team will email one within two business days of the order confirmation receipt if no further information is needed.

An approved proof is required for all orders that include a new plate (new art or replacement art) or a new bag size/style using a plate on file. After we review the files provided, the customer is responsible for any necessary revisions. Once revised, the customer must submit the revised artwork file and PDF. Our Art Department will review the revised files and either send a new proof for approval or note any further changes needed.

PDF proofs should be viewed at 100% on a regular-sized monitor (not a mobile device or tablet). The colors on the monitor or screen are not the same as those on the final product or imprinted color. All colors on proofs are digital representations of product color, Pantone Ink, or Foil colors.

Once everything is correct, reply to the most recent proof email with "Approved for Production." After this is received, the Art Department will order plates, and the lead time for the order will begin. Lead times vary, including an extended lead time during holiday buying months.

PLATE PRICES
SUBJECT TO CHANGE

INK-PRINT	PLATE SIZE	HOT-STAMP
$130.00	< 30 sq. in	$170.00
$174.00	31 - 40 sq. in	$200.00
$200.00	41 - 50 sq. in	$230.00
$250.00	51 - 60 sq. in	$270.00
$300.00	61 - 70 sq. in	$320.00
AT COST	70 sq. in +	AT COST

ADDITIONAL FEES

FEE TYPE:	APPLIES TO:	INK-PRINT	HOT-STAMP
Plate Change	2-Sided Printing with a Different Plate for Each Side	$120.00	$180.00
Color Change	2-Sided Printing with a Different Color for Each Side	$150.00	$150.00
LOT Charge	Any bag size that does not meet the minimum of 500 bags per bag size	$170.00	$200.00
ABOVE FEES ARE APPLIED PER BAG SIZE WITHIN AN ORDER			

ALL MAXIMUM PRINT AREAS ARE SUBJECT TO ARTWORK ACCEPTANCE

Bag Types Available for Each Size by Code:			
Eurotote (ET)	Manhattan (MH)	Serrated-Edge (SE)	Tint Tote (TT)

Dimension Line Legend		
Ink-Print	Hot-Stamp	Bag Midpoint

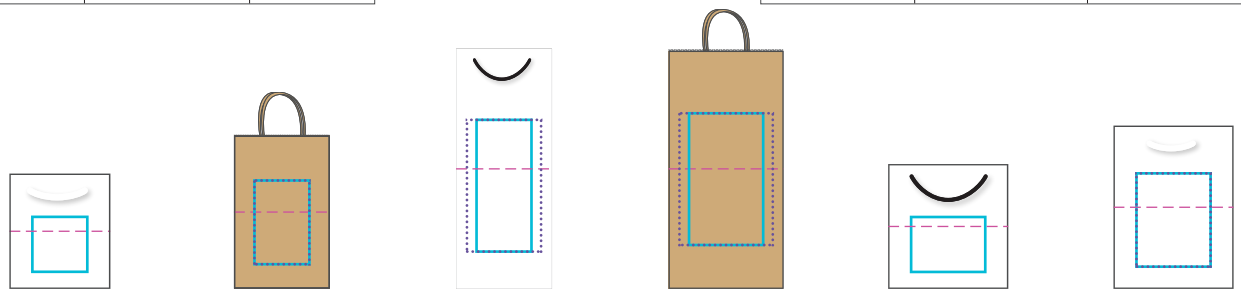

BAG SIZE	5¼ x 3½ x 6		5 x 3 x 8		5 x 3 x 12½		6 x 3 x 12½		6¼ x 3½ x 6½		6¼ x 3½ x 8½	
PRINT TYPE	INK PRINT	HOT STAMP	INK PRINT	HOT STAMP	INK PRINT	HOT STAMP	INK PRINT	HOT STAMP	INK PRINT	HOT STAMP	INK-PRINT	HOT-STAMP
MAX PRINT	N/A	3 x 3	3 x 4½	3 x 4½	4 x 7	3 x 7	5 x 7	4 x 7	N/A	4 x 3	4 x 5	4 x 5
BAG TYPE		ET • TT	SE	SE	MH • SE	MH • SE	MH • SE	MH • SE		MH	TT	ET • TT

MAXIMUM PRINT AREAS

Bag Types Available for Each Size by Code:				Dimension Line Legend		
Eurotote (ET)	Manhattan (MH)	Serrated-Edge (SE)	Tint Tote (TT)	Ink-Print	Hot-Stamp	Bag Midpoint

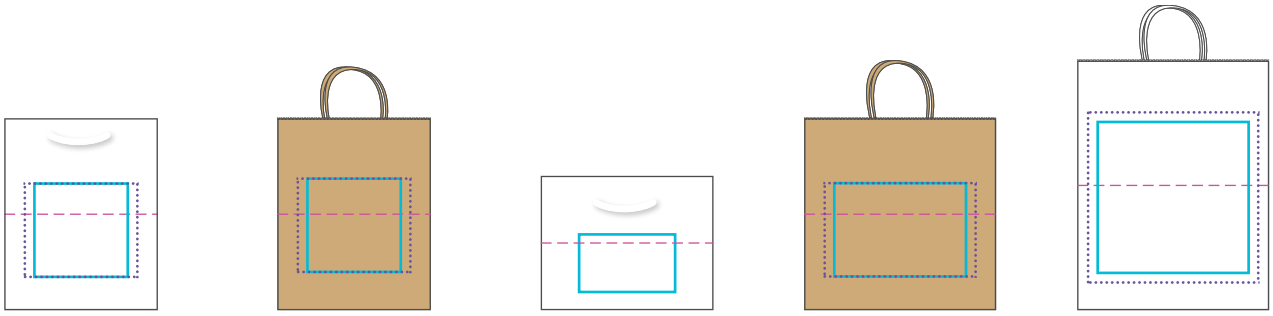

BAG SIZE	8 x 4 x 10		8 x 5 x 10		9 x 3¼ x 7		10 x 5 x 10		10 x 5 x 13	
PRINT TYPE	INK-PRINT	HOT-STAMP	INK-PRINT	HOT-STAMP	INK-PRINT	HOT-STAMP	INK-PRINT	HOT-STAMP	INK-PRINT	HOT-STAMP
MAX PRINT	6 x 5	5 x 5	6 x 5	5 x 5	N/A	5 x 3	8 x 5	7 x 5	8 x 7	7 x 7
BAG TYPE	MH • TT	MH • ET • TT	SE	JC • SE		ET	SE	SE	SE • TT	SE • TT

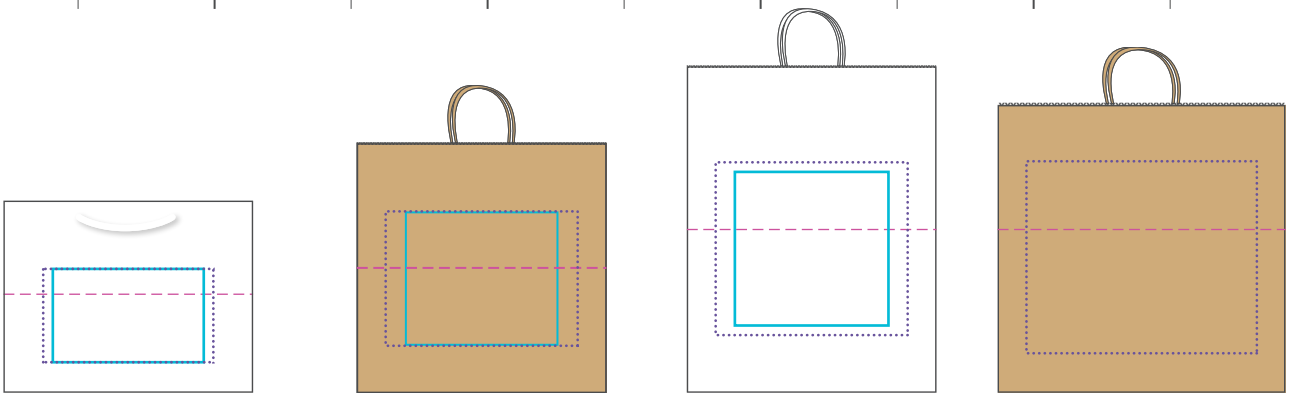

BAG SIZE	13 x 5 x 10		13 x 7 x 13		13 x 7 x 17		15 x 10 x 15	
PRINT TYPE	INK-PRINT	HOT-STAMP	INK-PRINT	HOT-STAMP	INK-PRINT	HOT-STAMP	INK-PRINT	HOT-STAMP
MAX PRINT	9 x 5	8 x 5	10 x 7	8 x 7	10 x 9	8 x 8	12 x 10	N/A
BAG TYPE	MH • SE • TT	ET • MH • SE • TT	SE	SE	SE	SE	SE	

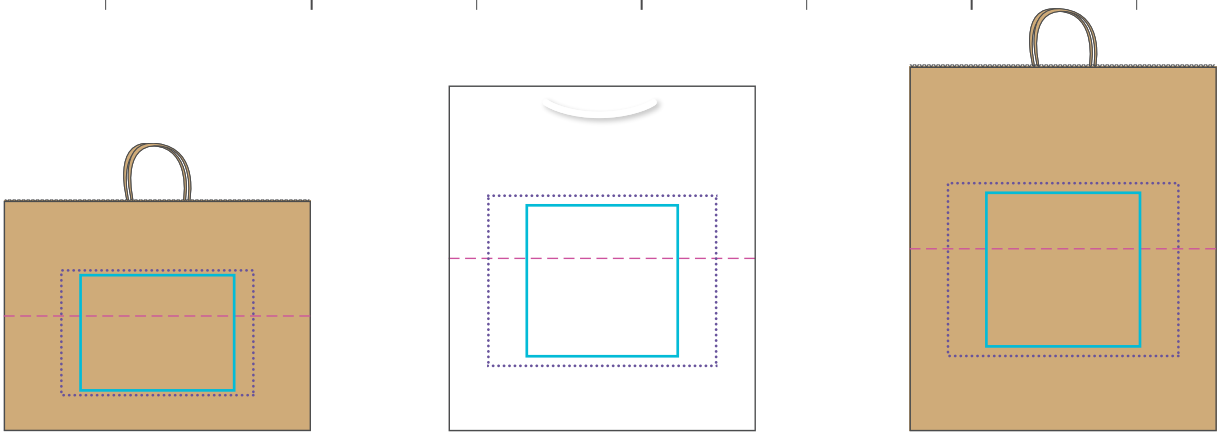

BAG SIZE	16 x 6 x 12		16 x 6 x 18		16 x 6 x 19	
PRINT TYPE	INK-PRINT	HOT-STAMP	INK-PRINT	HOT-STAMP	INK-PRINT	HOT-STAMP
MAX PRINT	12 x 6½	8 x 6	12 x 9	8 x 8	12 x 9	8 x 8
BAG TYPE	MH • SE • TT	ET • MH • SE • TT	TT	ET • TT	SE	SE

MAXIMUM PRINT AREAS

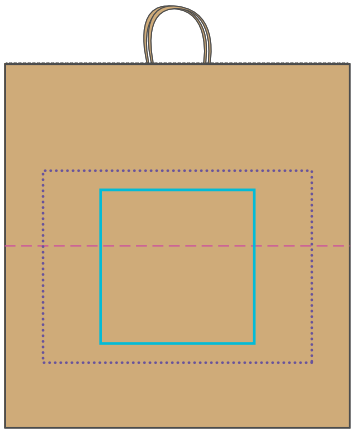
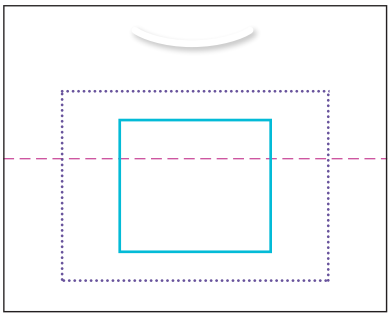
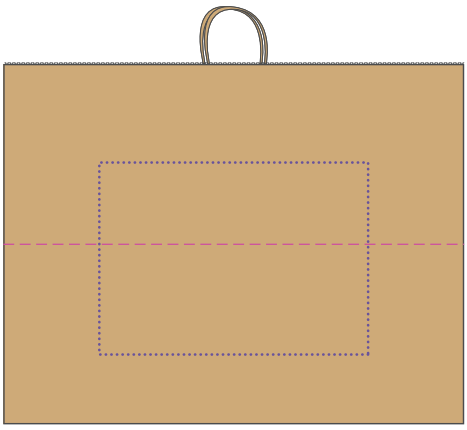

BAG SIZE	18 x 7 x 19		20 x 7 x 16		24 x 7 x 18	
PRINT TYPE	INK-PRINT	HOT-STAMP	INK-PRINT	HOT-STAMP	INK-PRINT	HOT-STAMP
MAX PRINT	14 x 10	8 x 8	14 x 10	8 x 7	14 x 10	N/A
BAG TYPE	SE	SE	MH	ET • MH	SE	

PAPER MERCHANDISE

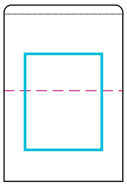
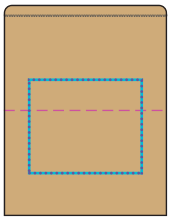
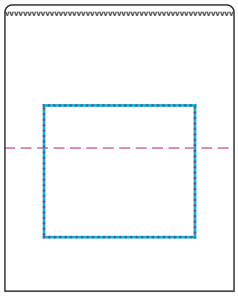

BAG SIZE	6¼ x 9¼		8½ x 11		12 x 15	
PRINT TYPE	INK-PRINT	HOT-STAMP	INK-PRINT	HOT-STAMP	INK-PRINT	HOT-STAMP
MAX PRINT	N/A	4 x 5	6 x 5	6 x 5	8 x 7	8 x 7

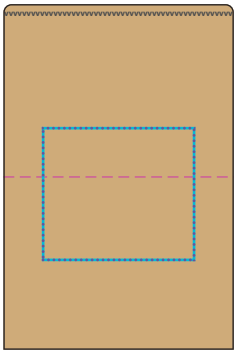
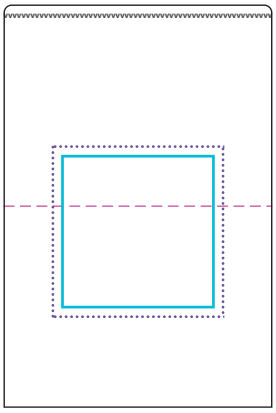
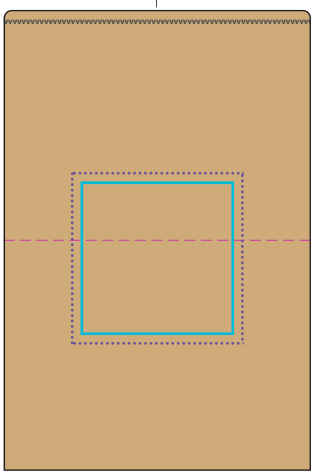

BAG SIZE	12 x 3 x 18		14 x 3 x 21		16 x 4 x 24	
PRINT TYPE	INK-PRINT	HOT-STAMP	INK-PRINT	HOT-STAMP	INK-PRINT	HOT-STAMP
MAX PRINT	8 x 7	8 x 7	9 x 9	8 x 8	9 x 9	8 X 8

INK-PRINTING

color swatches

PMS 305	PMS 318	PMS 3115	PMS 631	PMS 3125	PMS 312	PMS 2995	PMS 299	PMS 7461
PMS 644	PMS 7454	PMS 646	PMS 660	PMS 285	PMS 801	PROCESS BLUE	PMS 6125	PMS 2153
PMS 7469	PMS 308	PMS 534	PMS 2728	PMS 293	PMS 286	REFLEX BLUE	PMS 72	PMS 281
PMS 5645	PMS 5483	PMS 8205	PMS 3145	PMS 5415	PMS 2376	PMS 2955	PMS 295	PMS 309
PMS 556	PMS 354	PMS 348	PMS 335	PMS 3425	PMS 5545	PMS 554	PMS 342	PMS 357
PMS 367	PMS 375	PMS 376	PMS 7489	PMS 360	PMS 576	PMS 2278	PMS 343	PMS 350
PMS 7485	PMS 5777	PMS 384	PMS 383	PMS 5757	PMS 392	PMS 385	PMS 378	PMS 560
PMS 3242	PMS 570	PMS 3262	PMS 326	PMS 327	PMS 3282	PMS 321	PMS 328	PMS 322

SPECIAL INK CHARGE: $300

INK-PRINTING

color swatches

PMS 108	PMS 110	PMS 143	PMS 7410	PMS 722	PMS 165	PMS 173	PMS 1525	PMS 021
PMS 1767	PMS 700	PMS 1775	PMS 211	PMS 232	PMS 1915	PMS 205	PMS 226	PMS 208
PMS 185	PMS 186	PMS 199	PMS 180	PMS 1805	PMS 1807	PMS 194	PMS 1815	PMS 209
PMS 2716	PMS 258	PMS 2597	PMS 268	PMS 526	PMS 527	PMS 520	PMS 519	PMS 262
PMS 2736	PMS 2745	PMS 274	PMS 2090	Pantone Violet	PMS 511	PMS 5185	PMS 490	PMS 497
PMS 877 SILVER	PMS 876 COPPER	PMS 871 GOLD	PMS 8003	Cool Gray 4	PMS 422	PMS 424	BLACK	White
	PMS 4515	PMS 470	PMS 7610	PMS 505	PMS 477	PMS 4625	PMS 476	
	PMS 409	Warm Gray 8	PMS 444	PMS 425	PMS 431	Cool Gray 11	PMS 432	

SPECIAL INK CHARGE: $300

HOT-STAMPING

METALLIC Foil swatches

Metallic Copper
Matte Copper
Metallic Champagne
Metallic Champagne Satin
Metallic Gold
Matte Gold

Metallic Silver
Matte Silver
Metallic Pewter
Metallic Brown
Metallic Black
Metallic Blue

Metallic Dark Blue
Metallic Blue Frost Satin
Metallic Pearl Blue
Metallic Blue Satin
Metallic Lime
Metallic Green

Metallic Sage Satin
Metallic Forest Satin
Metallic Pink
Metallic Fuchsia
Metallic Raspberry Satin
Metallic Rose Gold

Metallic Red
Metallic Red Satin
Metallic Candy Apple Red
Metallic Burgundy
Metallic Maroon
Metallic Purple

Metallic Purple Satin
Metallic Light Purple
Metallic Lavender Satin
Metallic Teal Satin
Metallic Teal

HOT-STAMPING

MATTE Foil swatches